WABCO

SERVICE MANUAL 5011

STYLE R-2 COLOR LIGHT SIGNALS

INSTALLATION AND MAINTENANCE

June, 1980
B-80-500-971-4

PRINTED IN U.S.A.

UNION SWITCH & SIGNAL DIVISION
AMERICAN STANDARD INC.
Swissvale, PA 15218

STYLE R-2 COLOR LIGHT SIGNALS

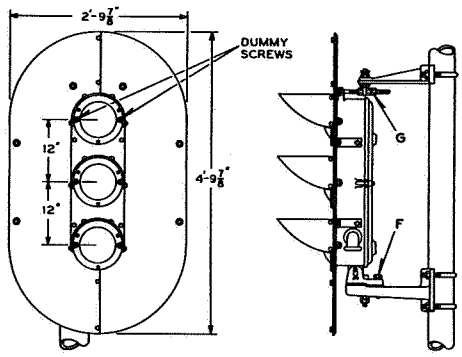

Fig. 1 Style "R-2" 3-Color Light Signal

Alignment:

Exact alignments of Style "R-2" signals are best obtained by use of the Sighting Telescope and Bracket especially designed for this purpose. The application of this Sighting Telescope to Style "R-2" signal cases is shown in Fig. 2. An expanding Jig E is placed inside the case as shown and expanded until the hardened points embed themselves slightly into the cast iron side of the case. The Telescope Bracket B is placed with its three machined pads against the ground edges of the case and the hook bolt D placed under the head of the pin in the Expanding Jig, after which the wing nut C is tightened so as to hold the Bracket to the back of the signal case. Care must be exercised to see that the three machined pads on the Bracket rest on the ground edges of the case as otherwise the signal will be incorrectly aligned. The Telescope A is then inserted in the tapered hole in the Bracket.

First align the signal horizontally; this is done by loosening Lock Nut F, Fig. 1, and shifting the Signal Case until the vertical cross-hair in the Telescope intersects the track at the point where the engineman should first pick up the indication. With the signal in this position, nut F should be tightened and the adjustment checked by means of the telescope to make sure that it has not been changed by the tightening of the nut.

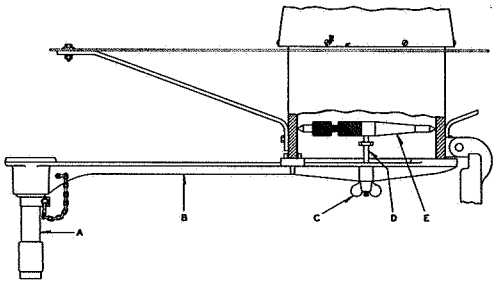

Fig. 2 Application of Sighting Telescope

The signal should then be aligned vertically. This is done by adjusting Lock Nut G until the horizontal cross-hair in the Telescope intersects the predetermined point on the track where the engineman should first pick up the indication.

After securely locking both horizontal and vertical adjustments check with the Telescope to insure that the proper alignment has been maintained.

Check of Telescope:

The Telescope should be checked occassionally to see that the cross-hairs are on its axis. With the telescope in position as shown in Fig. 2, turn it 360 degrees keeping it tight in the tapered hole as it is revolved. If the cross-hairs are on the axis of the Telescope, the point where the cross-hairs intersect the track will stay fixed as the Telescope is revolved. If the cross-hairs have become disturbed this point of intersection will move in a circle as the Telescope is revolved in which case the signal must be aligned on the center of this circle. If the circle is small the Telescope can be used by revolving it 360 degrees and estimating the center of the circle, but if the circle is large the Telescope should be returned to the manufacturer, to be readjusted.

Alignment on Curves:

Standard Style "R-2" Light signals are designed to produce a concentrated light beam for long range indication on tangent track or track of slight curvature.

Special "Deflecting Prisms" can be furnished when additional spread is required to properly signal track of greater curvature. See Service Manual SM-5452 for use of these cover glasses and for alignment of signals on curves.

Phankill Units are furnished in combination with the inclined cover glass assembly, which is equipped with a plain roundel to protect the Phankill Unit from the weather, dirt, etc. When shipped separately, this combination is fastened to a special studded ring "F" by means of two screws "A", as shown in Fig. 3. The lens in older signals are held in place by a flat lens ring, but signals of later manufacture are equipped with the special studded ring for attaching the inclined assembly to the signal. If the signal does not have the special studded ring, first remove and discard the plain flat ring from the lens and substitute lens ring "F" from the new Phankill Unit assembly. Apply the Phankill Unit and inclined cover glass assembly to the signal with the two screws "A" and adjust per instructions under "Close-up Prisms".

Fig. 3

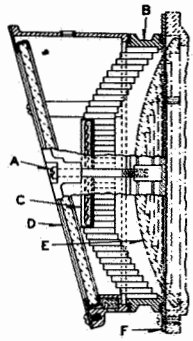

Fig. 5

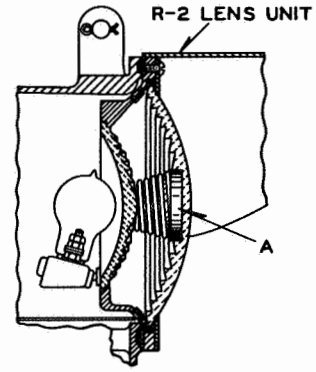

Close-up Prisms:

The Style "R-2" Light signal lens units are equipped with special prisms for close-up indication, located between the lenses. These are used to provide an indication in the line of sight of an engineman in a locomotive cab when he approaches the signal and after he has passed out of the limits of the spread of the main beam. Fig. 4 shows a close-up prism and indicates the direction the light is deflected with reference to the prismatic formations on the glass. This view also shows the word "Top" molded in the rim of the glass and the direction arrow.

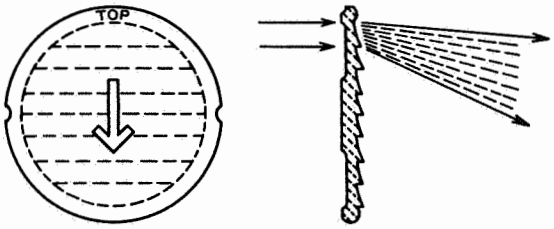

Fig. 4

Since signals are located at various heights and distances from the track, it is impossible to adjust the close-up prism at the factory for all conditions of installation. However, to produce the indication at a point most easily found by the installing forces in the field, the prism is adjusted at the factory to produce the close-up indication vertically downward. The installation forces should readjust the indication to meet local conditions.

Fig. 5 shows the location and assembly of the close-up prism in the lens unit. To gain access to prism, it is necessary to remove the inner, or colored, lens. The edge of the inner lens has a small "V" notch molded in. This notch is carefully lined up at the factory with a similar notch in the lens unit housing. When returning inner lens to the housing, care must be exercised to see that these two notches are again lined up; and be sure that the inner lens is resting on the bottom of the lens seat before the three clips are tightened to hold it in place. The close-up prism is positioned in the center "bull's-eye" section of the outer lens and can be rotated by hand in this section. When installing the inner lens, care must be maintained to see that the prism assembly is firmly seated in the front lens, and that the coil spring fits into the bull's eye of the inner lens. Any modification of the lens adjustment or change of lenses destroys the efficiency established by the factory adjustment.

In signals equipped with cover glasses and "Phankill" units, the close-up prism is located in the center of the Phankill screen as shown ("C" Fig. 3). When this assembly is added to a signal, the close-up prism assembly furnished with the signal must be removed. To adjust the close-up when assembly Fig. 3 is used, loosen but do not remove the two screws, "A". Rotate the entire "Phankill" unit "B" until the indication is observed at the desired point as described below and then tighten the two screws "A".

Adjustment of Close-up Prism:

To adjust the close-up indication, an observer should be stationed in a locomotive cab at a distance of 40 feet from the signal as indicated by point "X" Fig. 6. Although signals are located at various heights and distances from the track, the location of point "X" in advance of the signal is satisfactory for all customary signal installations. Point "X" is 12' above the rail and is the approximate height of an engineman's eye. If a locomotive is not available, some other device which will place the observer's eye at point "X" may be used. To adjust the indication, rotate the prism until a maximum indication is observed at "X". It will, of course, be necessary to replace the inner lens and lamp to make each observation.

For ground signals located 12 feet above the rail, the close-up prism must be turned to direct the indication approximately horizontal in order to be in line with

point "X" as shown in the lower view Fig. 6. For other signals, located at greater heights, such as the upper unit, the close-up prism will not require as much rotation away from the factory setting as will the lower signals.

Lamp Renewals:

Style "R-2" lamps are accurately rebased to insure that the filaments will be at the exact focal point when the lamps are applied in the field. Thus, when lamps are renewed, the long range indications are maintained without need of any readjustments.

In replacing lamps, care must be exercised to assure that the pins in the lamp base are turned to the end of the slot in the receptacle and forced up into their seats by the contact spring. This is necessary to place the filament in its correct location.

If non-precision lamps, having filaments appreciably off the true location, are used, not only will the signal indication be impaired, but the alignment of the light beam may not be parallel to the sighting device and, therefore, not pointing in the direction indicated. For best results, therefore, it is desirable that accurately rebased lamps be used.

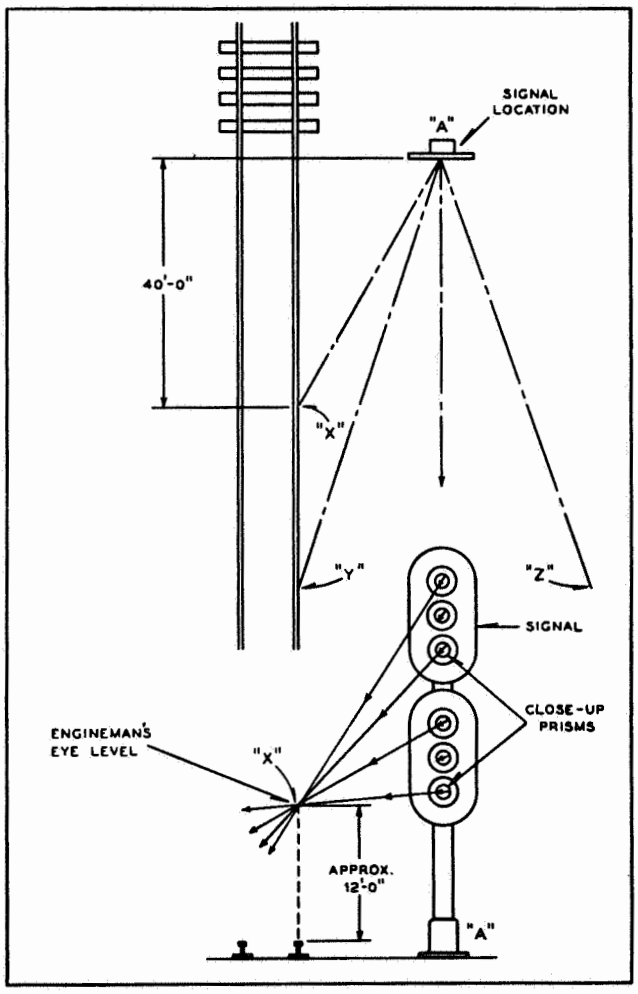

Fig. 6

Voltage of Lamps:

For information on lamps, their handling and recommended voltage, refer to **Service Manual SM-5037.**

Lens Units:

The optical system of the Style "R-2" Light Signals is made up in the form of complete and self-contained lens units. In case of breakage of either of the lenses or damage to the lamp receptacle, best results can be obtained if the complete lens unit is replaced and returned to the factory for repairs. Lenses may be replaced in the field although several lenses may have to be tried in the signal before a satisfactory indication can be obtained. A colored inner lens should never be replaced by a lens of different color without having the lamp socket relocated at the factory.

Lens units are interchangeable in the field without need of any readjustments or realignment of the signal. Correct focusing of the units is taken care of at the factory.

To replace a lens unit, disconnect the wire leads from the lamp receptacle, take out the two cap screws that hold the unit to the outer flange of the signal casting and remove the unit complete with lenses, lamp receptacle and hood from the front of the signal case. Clean the front surface of signal case if necessary in order that the new unit will properly seat. This is to insure that the unit will not be tilted and result in throwing the lightbeam in a direction differing from that of the other units in the signal case.

Cleaning Lenses:

Smoke and dust that collect on the exposed surface of the outside lens should be cleaned off from time to time in order to maintain normal range of the signal.